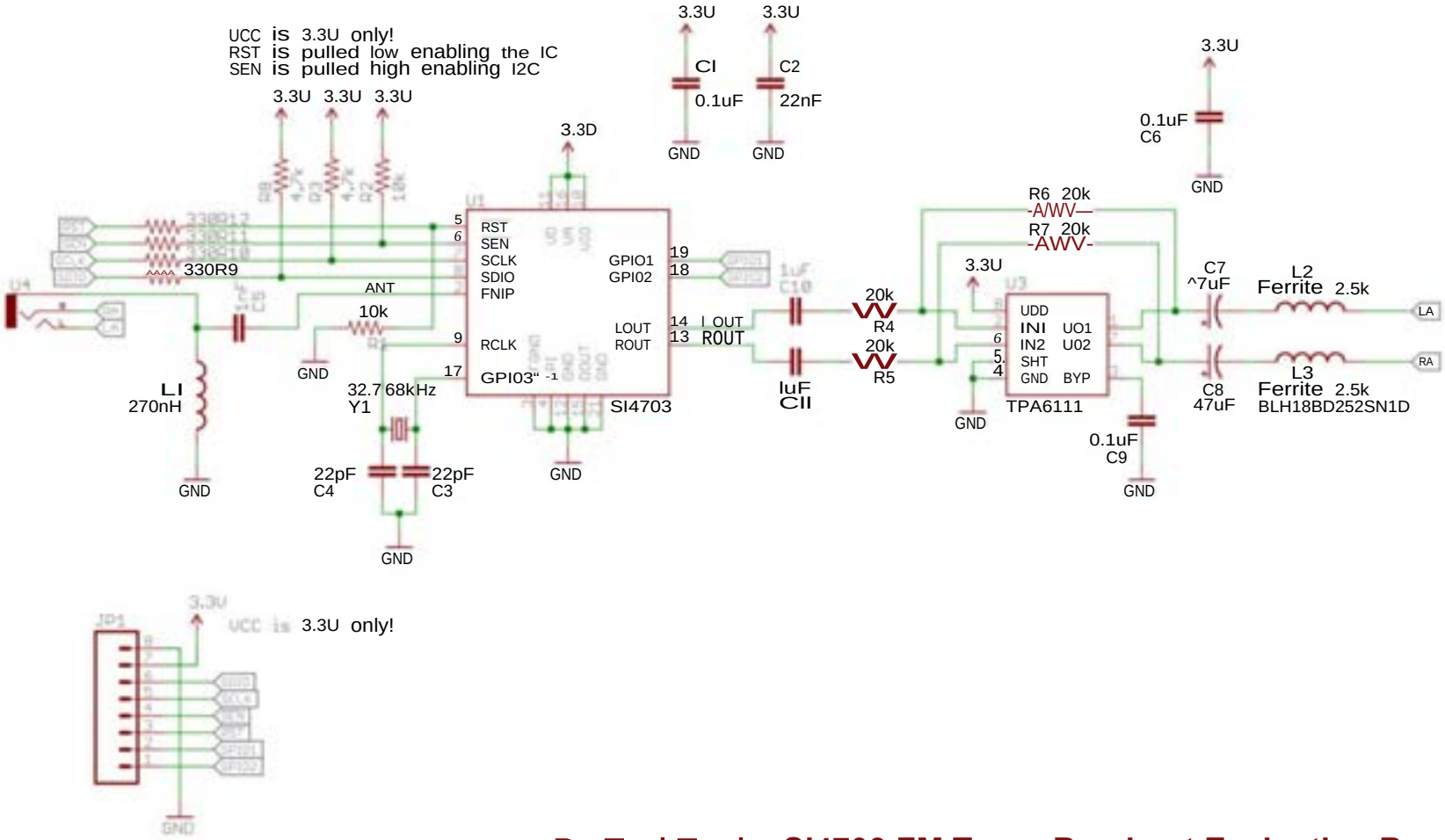

ProTechTrader Si4703 FM Tuner Breakout Evaluation Board

Model: PTT-Si4703 (Replaces SparkFun WRL-12938 v13) Radio Frequency Development Module

Sample Code: https://github.com/ProTechTrader

https://protechtrader.com/si4703-fm-tuner-radio-breakout-evaluation-board-Sparkfun-WRL-12938-v13